Description

Surge Protection Device (SPD) is a device that provides over voltage protection for various electronic equipment, instruments and communication lines. When there is a sudden power spike in an electrical circuit or communication line due to external interference, the current or voltage is high, the Surge Protective Device (SPD) can conduct and discharge in a very short time to prevent the power surge damaging other parts of the circuit.

Surge protective devices (SPD) are widely used in power system and network to play a big role for over-voltage protection.

SETsafe | SETfuse's Surge Protective Device SD20RxxxL405 series are mainly composed of varistor (MOV), pluggable module, base and internal and external electrode. Nominal discharge current: 20kA, Maximum continuous operating voltage: (275 ~ 750)VAC, certification: UL, cUL, TUV, CE, CQC complied with RoHS and REACH.

Dimensions (mm)

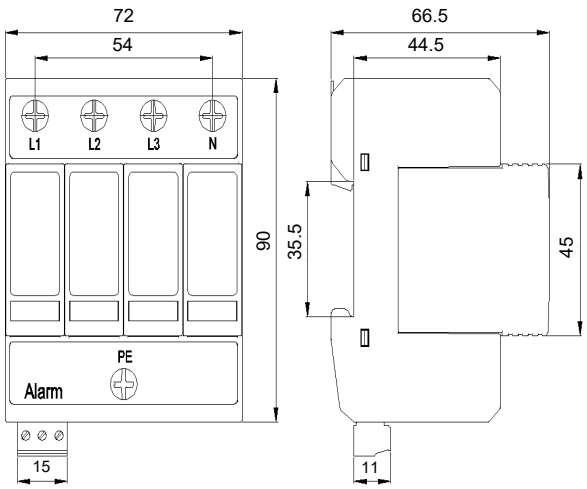

Schematics

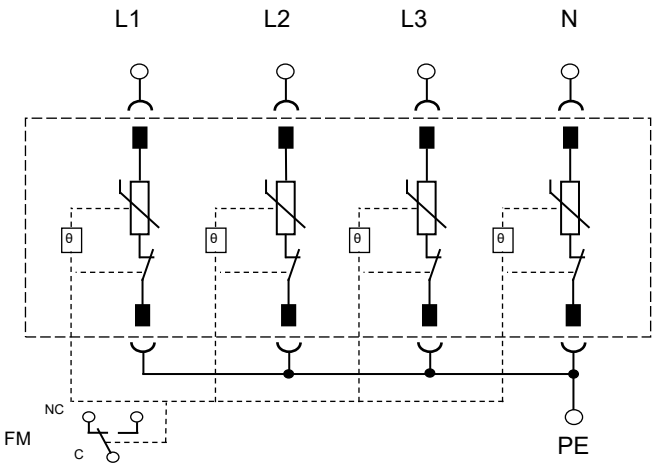

Features

- With Remote Signal Contact and Failure Indication
- Pluggable Module for Easy Replacement
- Comply with UL 1449 / IEC 61643-11
- Internal Thermal Protection, Fail-safe

Applications

- AC Power Supplies
- New Energy
- Residential Building
- Telecommunications
- Internet Data Center (IDC)
- Industrial Control

All Rights Reserved by Xiamen SET Electronics Co., Ltd. 2024-2026 V1.1

Agency Information

Agency Information		Standards	NO.	Category
	UL	UL 1449	E322662	Type 4CA
	CUL	CSA C22.2 NO.269.5	E322662	Type 4CA
	TUV	IEC/EN 61643-11	R 50441567	Class II
	TUV	IEC/EN 61643-11	B 107221 0006 Rev.00	Class II
	CE	IEC/EN 61643-11	AN 50536422	Class II
	CQC	GB 18802.11	CQC 20123264269	Class II

Specifications

Features	**Specifications**				
Model	SD20R275L405	SD20R230L405	SD20R440L405	SD20R550L405	SD20R750L405
Nominal System Voltage (U_n)	230 / 400 VAC	230 / 400 VAC	277 / 480 VAC	400 / 690 VAC	400 / 690 VAC
Maximum Continuous Operating Voltage (U_c)	L / N - PE: 275 VAC	L / N - PE: 385 VAC	L / N - PE:440 VAC	L / N - PE: 550 VAC	L / N - PE: 750 VAC
Nominal Discharge Current (8/20 μs) (I_n)	20 kA	20 kA	20 kA	20 kA	20 kA
Maximum Discharge Current (8/20 μs) (I_{max})	40 kA	40 kA	40 kA	40 kA	40 kA
Voltage Protection Rating (U_p)	L / N - PE: 1.4 kV	L / N - PE: 1.8 kV	L / N - PE: 2.0 kV	L / N - PE: 2.2 kV	L / N - PE: 2.8 kV
Modes of Protection	4+0 (L / N - PE)				
Max. Main-side Overcurrent Protection	80 A gL/gG	80 A gL/gG	80 A gL/gG	80 A gL/gG	80 A gL/gG
Agency Information	TUV、CE	UL、TUV、CE、CQC	TUV、CE	TUV、CE	TUV、CE
Short Current Rating I_{SCCR}	1.5 kA				
According to Standard	IEC/EN 61643-11 Class II, UL 1449 Type 4CA				
Degrees of Protection of enclosure	IP20				
Wiring Ability	(1.5 ~ 25) mm^2 (Flexible) / 35 mm^2 (Rigid)				
Installation	35 mm DIN rail				
Alarm	Remote + Indicator				
Operating State / Fault Indication	Green (OK) / Red (Fault)				
Remote Indication Contacts	AC: 250 V / 0.5 A, DC: 250 V / 0.1 A				
Altitude	- 500 ~ 5000 m				
Operational Temperature Range	(-40 ~ 85) °C				

All Rights Reserved by Xiamen SET Electronics Co., Ltd. 2024-2026 V1.1

Packaging Imformation

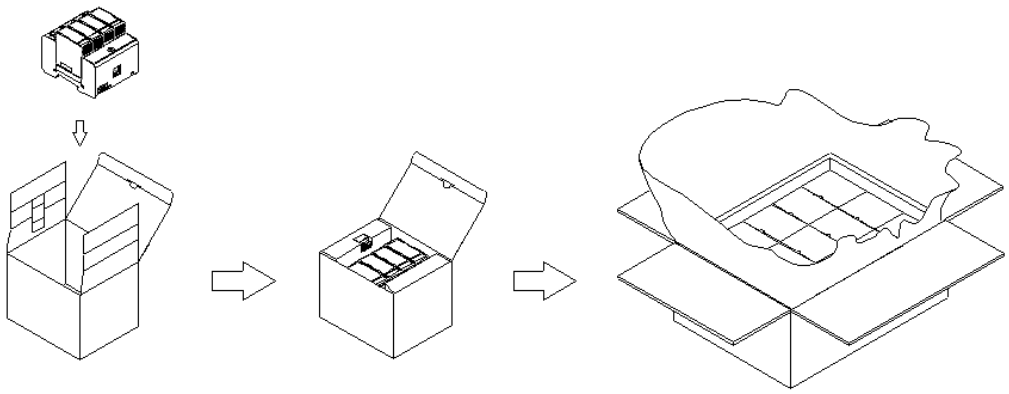

Item	Inner	carton
Package Size（mm)	148 x 110 x 105	360 × 325 × 245
Quantity (PCS)	1	30

Part Numbering System

SD 20 R 230 L 4 05 -xxx

Other Options

Wire Connection
05：Three-phase system (4+0)

Characteristic code
4：Four poles

Circuit Characteristic

Nominal System Voltage
150 V, 230 V, 270 V, 320 V

Design Sequence
R

Nominal Discharge Current
20：20 kA
30：30 kA

Product Category

Reminder：

Part numbering system in the datasheet is only for selecting correct parameter and product features. Before pl aing order, please contact us for specifications and use the part number and product code in the specifications to place order to ensure the part is correct. Product code is the unique indentification.

All Rights Reserved by Xiamen SET Electronics Co., Ltd. 2024-2026 V1.1

Wiring Diagram

Single phase system

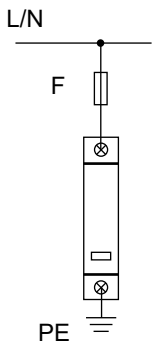

"1+0"
Connection

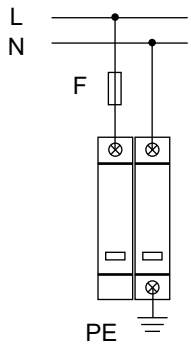

"2+0"
Connection

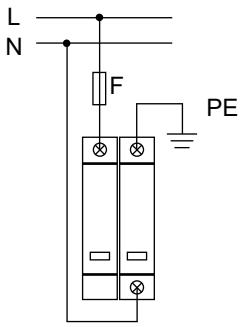

"1+1"
Connection

Three phase system

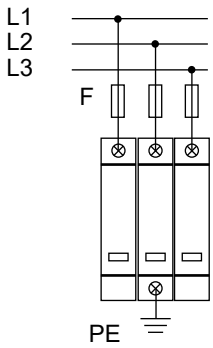

"3+0"
Connection

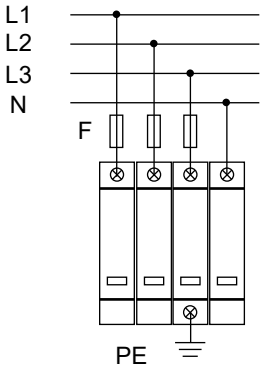

"4+0"
Connection

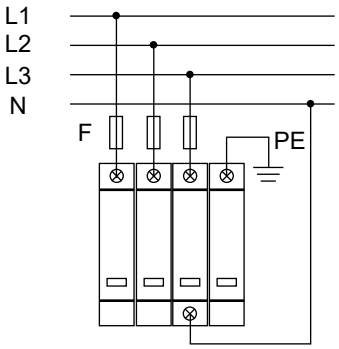

"3+1"
Connection

Connection of SPD in networks

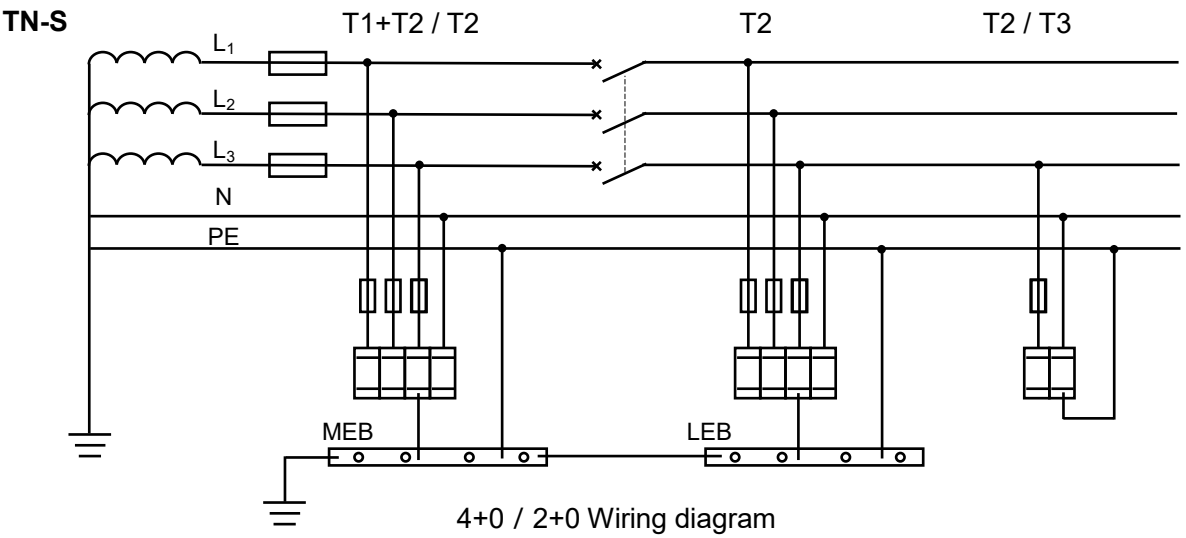

4+0 / 2+0 Wiring diagram

All Rights Reserved by Xiamen SET Electronics Co., Ltd. 2024-2026 V1.1

TN-S

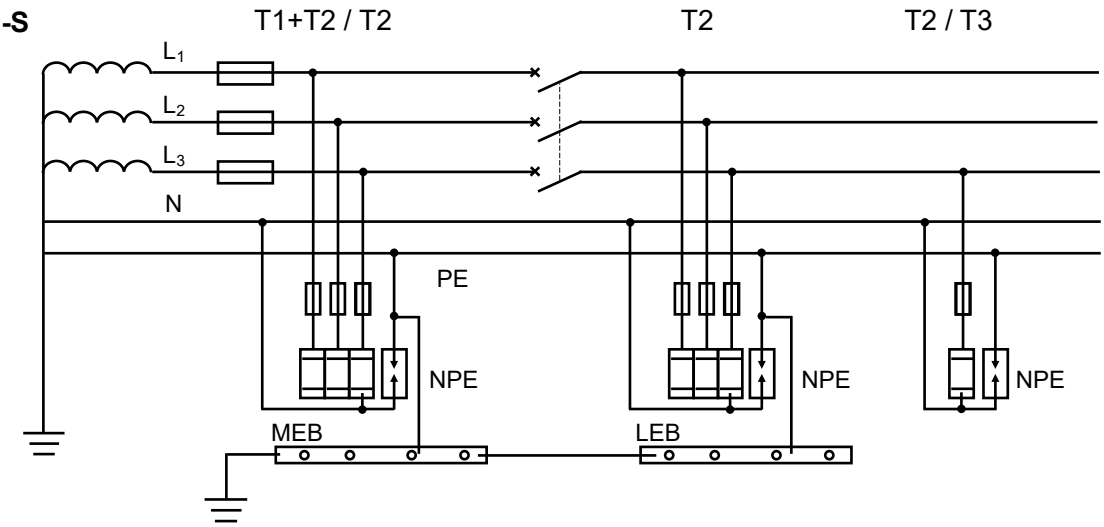

3+1 / 1+1Wiring diagram

TT

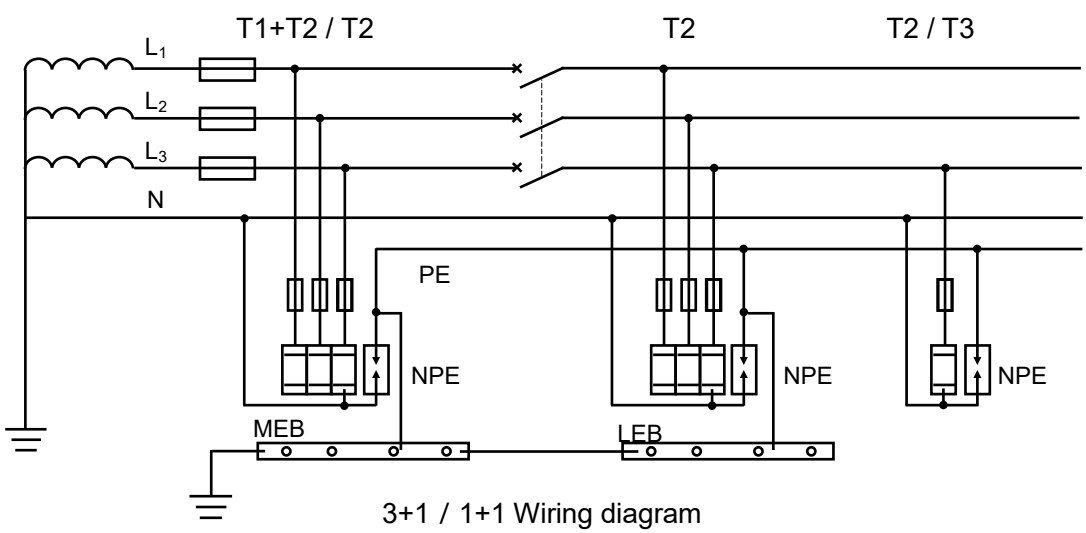

3+1 / 1+1 Wiring diagram

IT

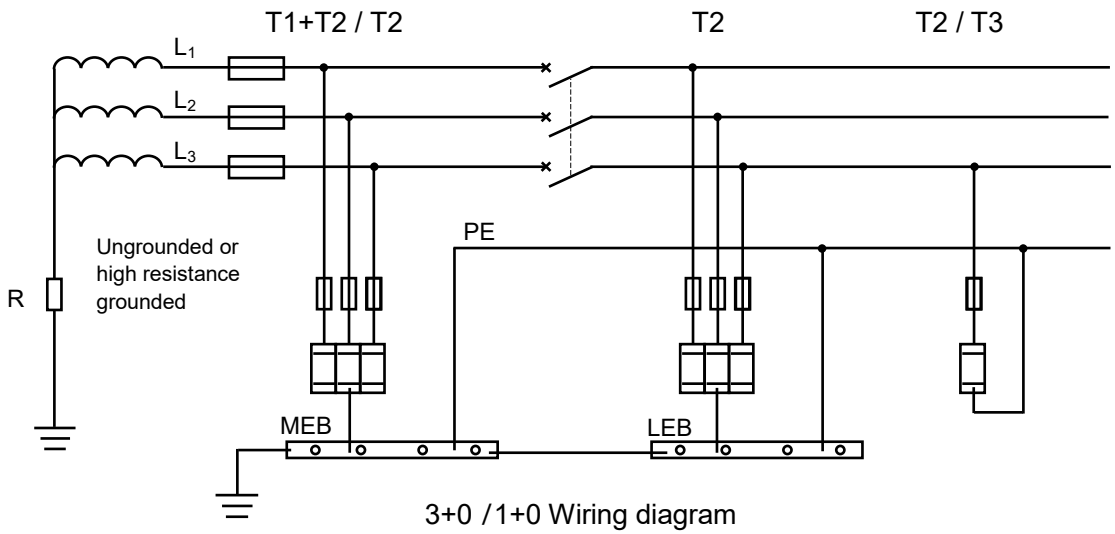

3+0 /1+0 Wiring diagram

All Rights Reserved by Xiamen SET Electronics Co., Ltd. 2024-2026 V1.1

Overvoltage

Electricity is an essential part of modern human production and life. But power facilities are threatened by internal and external overvoltages. Power system overvoltage mainly includes:

Transient overvoltage of atmospheric origin: Lightning strikes instantly generate high energy, generating surge currents up to hundreds of kA, and lightning wave can invade along power lines, causing damage to power facilities and electrical equipment

Transient overvoltage due to switching: Switching operations of a power utility may cause overvoltage.

Temporary overvoltage: A long duration (second level) temporary overvoltage (asymmetric ground fault) or harmonious overvoltage.

Surge Voltage Caused by Lightning

Electrical and electronic system are subject to damage from a lighting electromagnetic impulse (LEMP). Therefore SPM need to be provided avoid failure of internal system. LEMP may caused by direct, near and far lightning strikes. According to the relevant research, lightning strikes within a certain distance may cause dangerous overvoltage on the cable, endangering the equipment connected to it.

Damage Due to Lighting

The lighting can cause three basic type of damage:

—D1: injury to living beings by electric shock;

—D2: physical damage (fire, explosion, mechanical destruction, chemical release) due to lighting current effects, including sparking;

—D3: failure of internal systems due to LEMP

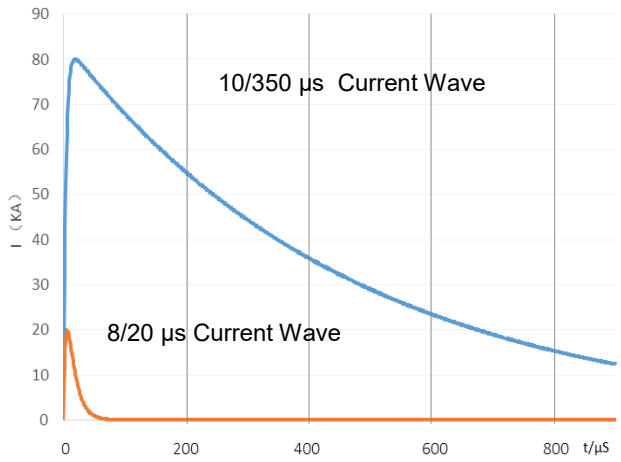

Standard lightning test wave

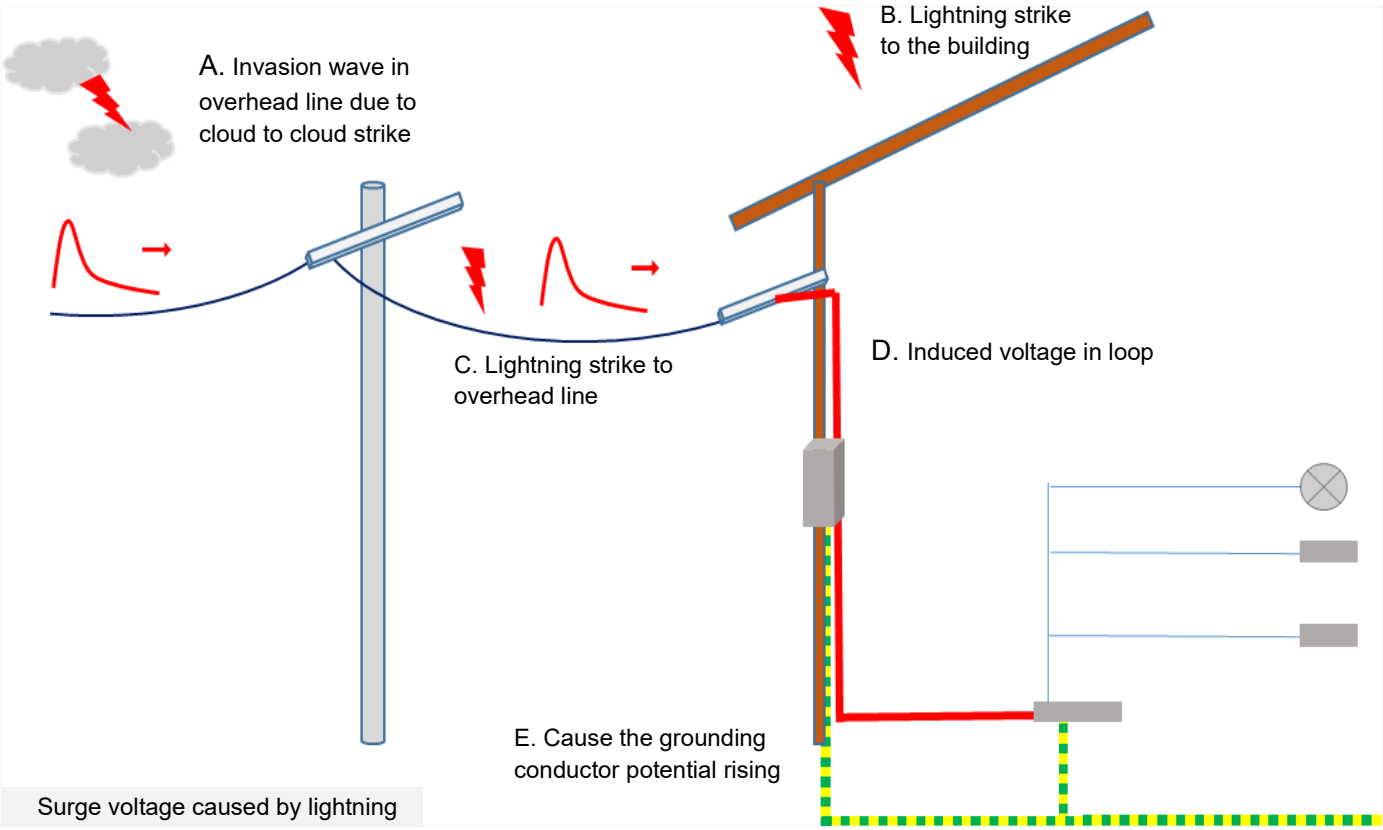

Surge voltage caused by lightning

All Rights Reserved by Xiamen SET Electronics Co., Ltd. 2024-2026 V1.1

Impulse Withstand Voltage and Surge Protection

As the primary equipment of internal lightning-proof, SPD needs to be able to withstand surge stress and provides the level of voltage protection required for the equipment. This involves the selection and coordination of SPD in different locations to form a complete protection system.

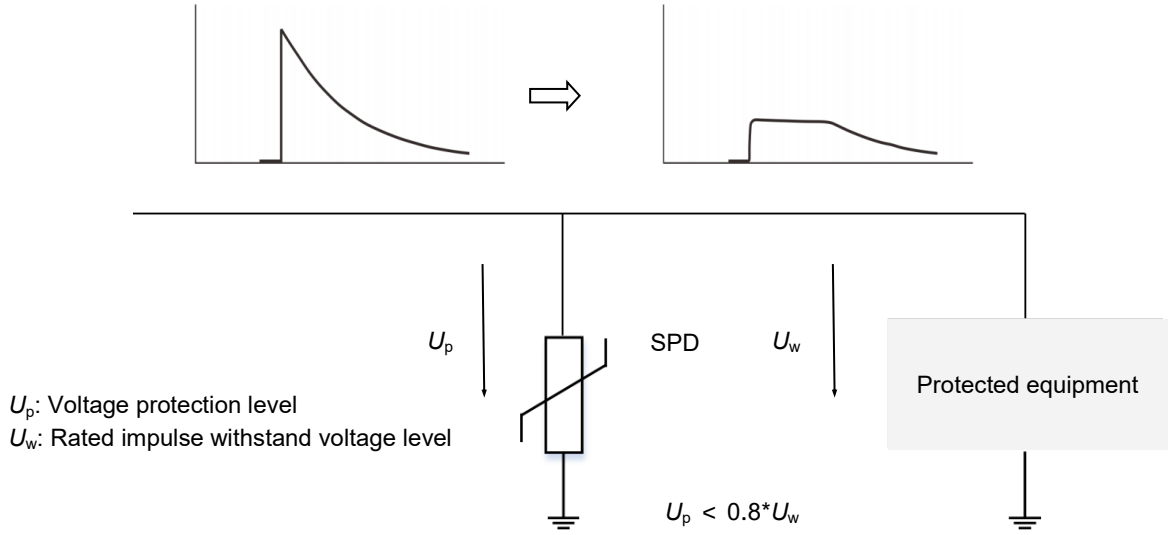

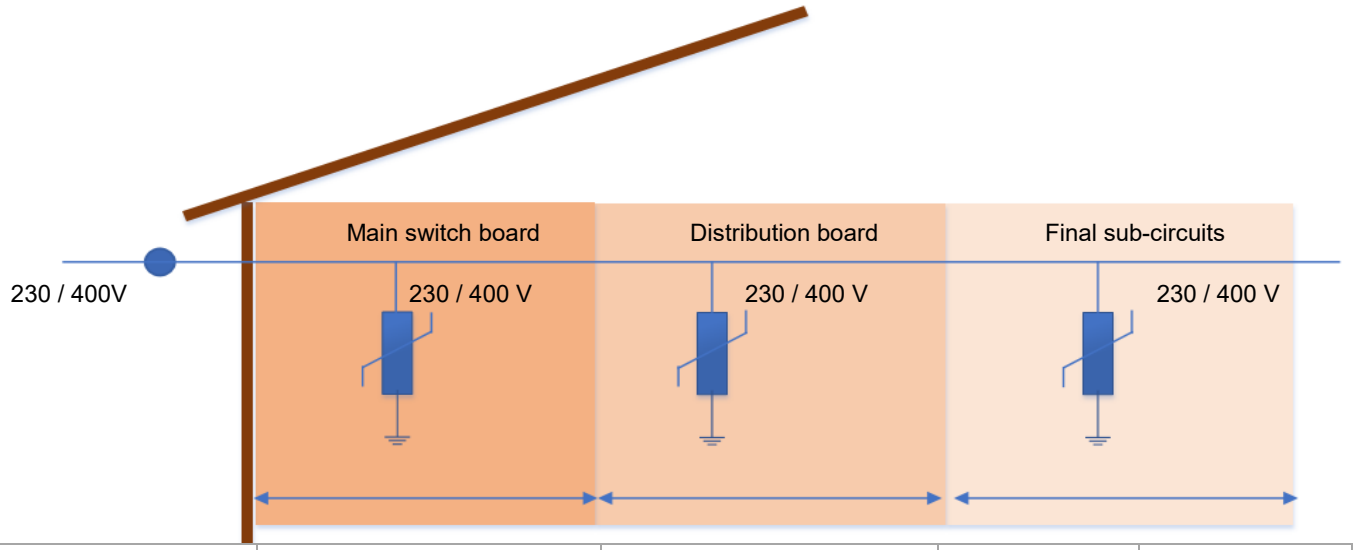

Overvoltage Category	IV	III	II	I
U_w (kV) Impulse Withstand Voltage	6	4	2.5	1.5
Lightning Protection Zone LPZ	LPZ1	LPZ2	LPZn	
SPD Type	Class I or Class II	Class II	Class II or Class III	

All Rights Reserved by Xiamen SET Electronics Co., Ltd. 2024-2026 V1.1

Glossary

Item	Description
U_p	**Votage Protection Level** Maximum voltage to be expected at the SPD terminals due to an impulse stress with defined voltage steepness and an impulse stress with a discharge current with given amplitude and wave shape. — (IEC 61643-11)
8/20 μs	**8/20 Current Impulse** Current impulse with a nominal virtual front time of 8 μs and a nominal time to half-value of 20 μs. — (IEC 61643-11)
1.2/50 μs	**1.2/50 Voltage Impulse** Voltage impulse with a nominal virtlual front time of 1.2 μs and a nominal time to half-value of 50 μs. — (IEC 61643-11)
U_c	**Maximum Continuous Operating Voltage** Maximum r.m.s. voltage, which may be continuously applied to the SPD's mode of protection. — (IEC 61643-11)
I_n	**Nominal Discharge Current** Crest value of the current through the SPD having a current waveshape of 8/20 μs. — (IEC 61643-11)
I_{imp}	**IImpulse Discharge Current for Class I Test** Crest value of a discharge current through the SPD with specified charge transfer Q and specified energy W/R in the specified time. — (IEC 61643-11)
I_{max}	**Maximum Discharge Current** Crest value of a current through the SPD having an 8/20 μs waveshape and magnitude according to the manufacturers specification. I_{max} is equal to or greater than I_n. — (IEC 61643-11)
Modes of Protection	**Modes of Protection** An intended current path, between terminals that contains protective components, e.g. line-to-line, line-to-earth, line-to-neutral, neutral-to-earth. — (IEC 61643-11)
IP	**Degrees of Protection of enclosure** Classification preceded by the symbol IP indicating the extent of protection provided by an enclosure against access to hazardous parts, against ingress of solid foreign objects and possibly harmful ingress of water. — (IEC 60529)
TCO	**Thermal-Link** A non-resettable device incorporating a THERMAL ELEMENT which will open a circuit once only when exposed for a sufficient length of time to a temperature in excess of that for which it has been designed.
ATCO	**Alloy Thermal-Link** Alloy Type Thermal-Link, Alloy is the thermal element.

All Rights Reserved by Xiamen SET Electronics Co., Ltd. 2024-2026 V1.1

ATTENTION

Usage

1. The voltage applied continuously to the SPD must not exceed its maximum continuous operating voltage U_c.
2. When atmosphere press is from 54 kPa to 106 kPa, the related altitude shall be from 5000 m to - 500 m.
3. Do not touch the product body or wires directly when power is on, to avoid electric shock.

Replacement

As SPD is a non-repairable product, for safety sake, please use the same type of SPD for replacement.

Storage

Do not store SPD at high temperature, high humidity or corrosive gas environment. Use them up within 2 years after receiving the goods.

Installation

1. Installation and startup may only be carried out by qualified personnel. The relevant country-specific regulations must be observed.
2. Check the device for external damage before installation. If the device is defective, it must not be used.
3. Pay attention to risk of electric shock. Please cutoff all electrical power before installation or service.
4. Lay the output cables to the surge protective devices (SPDs) as short as possible, without loops.
5. Please install proper backup protection devices in front of SPD.
6. Do not apply mechanical stress to the SPD body during or after the installation.

Maintenance

1. Check SPD status according to instructions before and after the thunderstorm season each year.
2. If the indicator of "failure state" appears, the SPD is damaged. Replace the SPD with same type.
3. Ensure electrical connections and mountings are correct before energizing the circuit.
4. SPD`s quality is well controlled and strictly inspected before delivery. If non-functional ones are found during operation, please contact us early enough.

All Rights Reserved by Xiamen SET Electronics Co., Ltd. 2024-2026 V1.1